Appendix 03
Traffic and Parking Assessment Report

Proposed Rezoning for Industrial Uses
1 to 4 Old Bathurst Road, Emu Plains

Traffic and Parking Assessment Report

Prepared for: Le Bursicot

June 2022

Report No: PT21024r01_Final_V4

TABLE OF CONTENTS

1. Introduction 4

2. Existing Development / Conditions 5

2.1 Site Location 5

2.2 Existing Zoning 5

2.3 Historical Development Approvals 6

2.4 Existing Site Traffic Generation 8

2.5 Existing Zoning Potential Traffic Generation 8

2.6 Classification Criteria 8

2.7 Existing Road Network 9

2.8 Existing Traffic Flows 9

2.9 Public Transport - Buses 10

2.10 Penrith City Council Section 7.12 City Wide Contributions Plan 11

3. Background Report Review 13

3.1 Emu Plans Commuter Car Park Proposal 13

3.2 158 – 164 Old Bathurst Road Emu Plains Industrial Precinct Traffic Impact Assessment Report – SCT Consulting 6 April 2022 13

4. The Proposed Development 19

5. Potential Traffic Impacts 20

5.1 Introduction 20

5.2 Development Traffic Generation 20

5.3 Trip Distribution 20

5.4 Future Year Intersection Operating Conditions 21

5.5 Active Transport Assessment 23

6. Parking and Access Review 24

6.1 Council DCP Parking Provision 24

7. Conclusions 25

8. Appendix A – Intersection Count 26

9. Appendix B – Plans of Potential Development 27

10. Appendix C – SIDRA Outputs 28

List of Figures

Figure 1 - Site Location
Figure 2 – Existing Site Zoning
Figure 3 – DA20/0158 Approved Subdivision Arrangements Including Subject Site
Figure 4 – Existing Bus Stops Near Site
Figure 5 – Route 688 Bus Service Route of Travel
Figure 6 – Emu Plains Railway Station 750 Parking Space New Commuter Car Park Arrangements
Figure 7 – 158 – 164 Old Bathurst Road (Site D) Proposed Industrial Development
Figure 8 – Adopted Old Bathurst Road / Russell Street Adopted Signalised Intersection Configuration
Figure 9 – Resultant Site Zoning
Figure 10 – Adopted Trip Distribution
Figure 11 – Resultant Distribution of Trips by Approach Road

List of Tables

1. Introduction

This report has been prepared on behalf of Le Bursicot to present findings of a traffic and parking assessment of the proposed rezoning of the site known as 1 to 4 Old Bathurst Road, Emu Plains from a combination of industrial / rural residential to sole industrial uses.

The study has assessed existing traffic conditions, parking demands, access arrangements, future traffic conditions and design compliance.

The remainder of the report is set out as follows:

- Section 2 describes the existing traffic and parking conditions;
- Section 3 provides a summary of known traffic assessment reports conducted in the immediate area;
- Section 4 summarises the proposed development;
- Section 5 reviews the potential traffic impacts of the proposal;
- Section 6 reviews the design for compliance with relevant standards; and
- Section 7 presents the conclusions

2. Existing Development / Conditions

The following presents a summary of existing site and traffic conditions.

2.1 Site Location

The proposed site includes frontages to both Russell Street in the west and Old Bathurst Road in the south. The existing site is a greenfield site and its location is shown in **Figure 1**.

Figure 1 - Site Location

Source: Nearmap

The site surrounds an existing electrical substation located on the north-east corner of the intersection of Old Bathurst Road / Russell Street.

2.2 Existing Zoning

The currently includes a proportion designated as 'IN2 Light Industrial' and 'Rural D Future Urban' and the arrangements of the existing zoning across the site is shown below in **Figure 2**.

Figure 2 – Existing Site Zoning

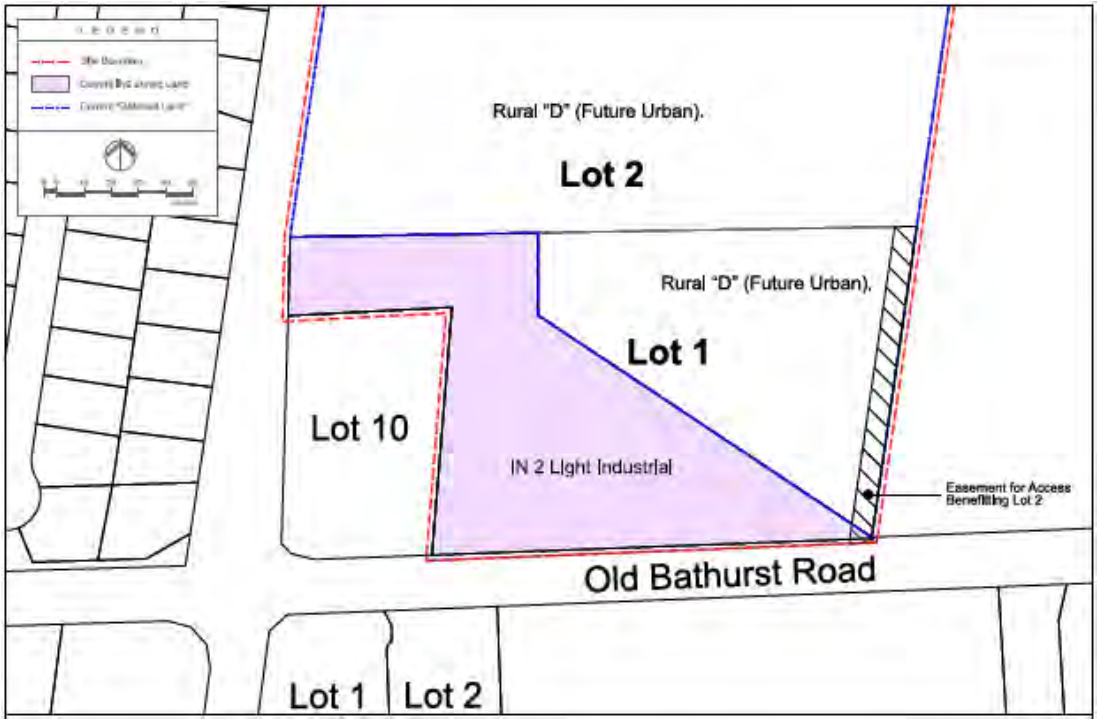

2.3 Historical Development Approvals

It is noted that the subject site was included in a previous subdivision development application (DA20/0158) now approved by Penrith City Council to create Lot 1 (light industrial / rural D zoned land) and Lot 2 (rural housing zoned land. The lot arrangements approved by Penrith City Council are shown below in **Figure 3**.

Figure 3 – DA20/0158 Approved Subdivision Arrangements Including Subject Site

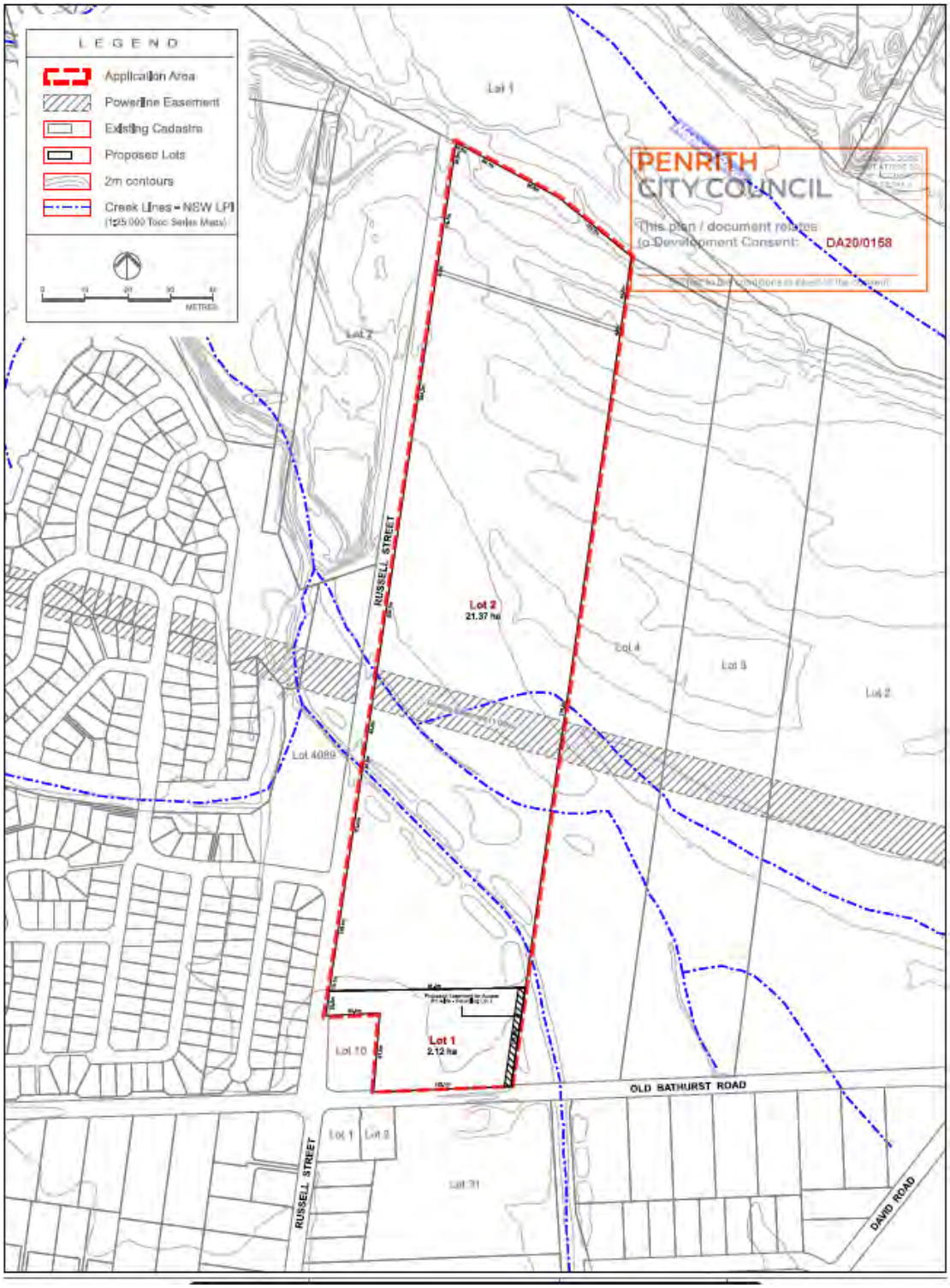

The intent of the subdivision was to create an allotment which complied with both the Industrial zoned land minimum lot size and the Rural "Future Urban" zone minimum lot size (being 2ha) to allow future development of the land. However, Lot 1 includes remnant rural residential zoning over a portion of the land which requires a further rezoning application which is the subject of this report.

2.4 Existing Site Traffic Generation

As stated above the existing site is a greenfield site and does not generate any traffic.

2.5 Existing Zoning Potential Traffic Generation

Lot 1 currently includes a combination of mainly IN2 Light Industrial zoning (11,000m^2) with small area zoned as Rural D future urban residential zoning.

On the basis that the site was developed under its current zoning, the potential light industrial proportion of the site would achieve a total of 5,500m^2 gross floor area (based on an assumed FSR of 0.5:1).

Applying the RMS Technical Direction 2013/04a rates for an industrial development (shown below),

Business parks and industrial estates

In 2012 eleven of these two types of sites were surveyed, four within the Sydney urban area, four within the Lower Hunter, one in the Illawarra and one in Dubbo. Summary vehicle trip generation rates were as follows:

Weekday Rates	Sydney Average	Sydney Range	Regional Average	Regional Range
AM peak (1 hour) vehicle trips per 100 m^2 of GFA.	0.52	0.15-1.31	0.70	0.32-1.20
PM peak (1 hour) vehicle trips per 100 m^2 of GFA.	0.56	0.16-1.50	0.78	0.39-1.30
Daily total vehicle trips	4.60	1.89-10.47	7.83	3.78-11.99

the existing zoned site would be expected to generate **29 AM Peak** hour trips two way and **31 PM Peak** hour trips way. The remaining portion of Lot 1 would not be expected to generate any traffic to any great extent given the minimum 2,000m^2 rural housing lot restrictions on such zoned land.

2.6 Classification Criteria

It is usual to classify roads according to a road hierarchy in order to determine their functional role within the road network. Changes to traffic flows on the roads can then be assessed within the context of the road hierarchy. Roads are classified according to the role they fulfil and the volume of traffic they should appropriately carry. The RTA has set down the following guidelines for the functional classification of roads.

- Arterial Road – typically a main road carrying over 15,000 vehicles per day and fulfilling a role as a major inter-regional link (over 1,500 vehicles per hour)
- Sub-arterial Road – defined as secondary inter-regional links, typically carrying volumes between 5,000 and 20,000 vehicles per day (500 to 2,000 vehicles per hour)
- Collector Road – provides a link between local roads and regional roads, typically carrying between 2,000 and 10,000 vehicles per day (250 to 1,000 vehicles per hour). At volumes greater than 5,000 vehicles per day, residential amenity begins to decline noticeably.
- Local Road – provides access to individual allotments, carrying low volumes, typically less than 2,000 vehicles per day (250 vehicles per hour).

2.7 Existing Road Network

Old Bathurst Road – is a Regional Road as defined Transport for NSW Schedule of Classified Roads and Unclassified Regional Roads. The road links the Great Western Highway in the east (and also providing a location to cross the Hawkesbury River) and Blaxland in the west providing one of the few links to the Blue Mountains. The intersection of Old Bathurst Road / Russell Street is controlled by a single lane roundabout. The speed limit in Old Bathurst Road is 50km/hr to a point some 100m east of the roundabout where it is 70km/hr. The road includes kerb and gutter along the southern side for the full frontage of the subject site. However, on the northern side kerb and gutter is only present for a distance of 100m. Across the frontage of the site the road includes a carriageway width of approximately 11.0m with a single travel lane in each direction and formed shoulders. Separate right and left turn bays are provided to the existing McDonalds Restaurant / Service Station on the south-eastern corner of the intersection of Old Bathurst Road / Russell Street.

Russell Street – north of Old Bathurst Road is a local street providing access to the suburb of Emu Heights. South of Old Bathurst Road Russell Street performs more like a Collector Road (Regional Road) as it provides direct access under the Western Railway Line and to the M4 Motorway via its own grade separated interchange. Across the site frontage Russell Street includes a carriageway width of approximately 11.0m, a single travel lane in each direction with unrestricted parallel parking on both sides of the street and a posted speed limit of 50km/hr.

2.8 Existing Traffic Flows

To gauge existing traffic flows on the surrounding road network an intersection count was undertaken on Wednesday 28th April 2021 at the intersection of Old Bathurst Road / Russell Street between the hours of 6:30am – 9:30am and 3:30pm – 6:30pm to capture both the expected peak periods of an industrial use and road network peak. Copies of the intersection count can be found in **Appendix A** of this report. The peak flows by direction in each street at each intersection are summarised below.

Of note, the morning peak demands occurred between **7:45am – 8:45am** and the afternoon peak period occurred between **4:30pm – 5:30pm**.

Table 1 – Existing Weekday Peak Period Volumes in vicinity of site (veh/hr)

		Weekday AM		Weekday PM	
Road	Location	NB/EB	SB/WB	NB/EB	SB/WB
Old Bathurst Road	East of Russell Street	1,066	382	463	914
	West of Russell Street	848	360	496	910
Russell Street	North of Old Bathurst Road	64	207	203	127
	South of Old Bathurst Road	513	460	522	483

From **Table 1** it can be seen that existing flows on surrounding roads are in generally in line with their classification.

2.9 Public Transport - Buses

The Russell Street frontage of the subject site is located directly adjacent to an existing southbound bus stop in Russell Street which is part of the loop bus service serving Emu Heights. Further, approximately 400m walking distance (centroid of Old Bathurst Road frontage) from an existing westbound bus stop in Old Bathurst Road west of Russell Street. The locations of these stops are shown below.

Figure 4 – Existing Bus Stops Near Site

These stops within a convenient walking distance to the subject site provide a direct access to the Route 688 bus services which provides a loop service between Penrith and Emu Plains via Emu Heights. The route of travel of the 688 service is shown below in **Figure 5**.

Figure 5 – Route 688 Bus Service Route of Travel

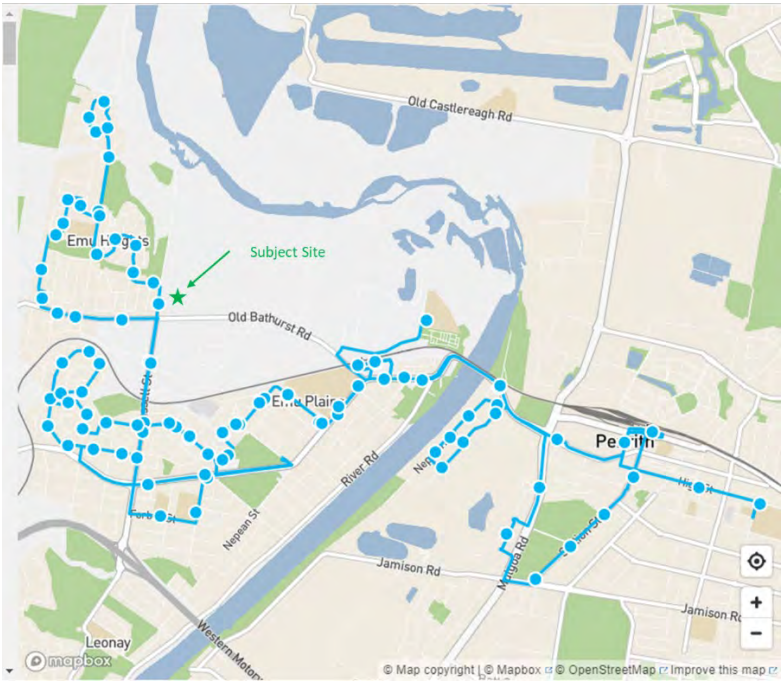

The Route 688 service provides seven (7) services during the AM period (between 5:30am – 9:00am) and seven (7) services in the PM period (4:00pm – 7:00pm)

2.10 Penrith City Council Section 7.12 City Wide Contributions Plan

The current city-wide contributions plan of Penrith City Council for non-residential development seeks to provide funding from developments for the provision of a range of infrastructure upgrades throughout the Penrith Local Government Area.

Of direct relevance to this project is the identified upgrade of the intersection of Russell Street / Old Bathurst Road to provide a signalised intersection at the location in place of the existing single lane roundabout.

The contributions plan details these works in Appendix A – Infrastructure Schedule and Location Plans as presented below.

Penrith City Section 7.12 Development Contributions Plan- as amended
Penrith City Council – November 2020

APPENDIX A: INFRASTRUCTURE SCHEDULE AND LOCATION MAPS

A.1 WORKS SCHEDULE

Infrastructure Works	Proposed Location	Estimated Costs $	Priority of works
1. Traffic management facilities			
T1 - Industrial Roundabout	Batt Street/Regentville Road, Jamisontown	$750,000	High
T2 - Traffic Signals	Old Bathurst Road/Russell Street, Emu Plains	$5,250,000	Low

The contributions plan identifies the proposal to convert the existing single lane roundabout to traffic signals as a 'low priority' of works compared to other infrastructure proposals identified in the contributions plan.

3. Background Report Review

The following presents a summary of publicly assessment traffic impact assessment report/s which have been undertaken in the immediate area.

3.1 Emu Plans Commuter Car Park Proposal

This Transport for NSW initiative seeks to provide a new **750 space** commuter car park within a short walking distance to the Emu Plains Railway Station with direct vehicular access from a new roundabout located in Old Bathurst Road. The **750-space** commuter car park would be connected to the railway station via a new pedestrian footbridge.

The proposed car park / access arrangements are shown below in **Figure 6**.

Figure 6 – Emu Plains Railway Station 750 Parking Space New Commuter Car Park Arrangements

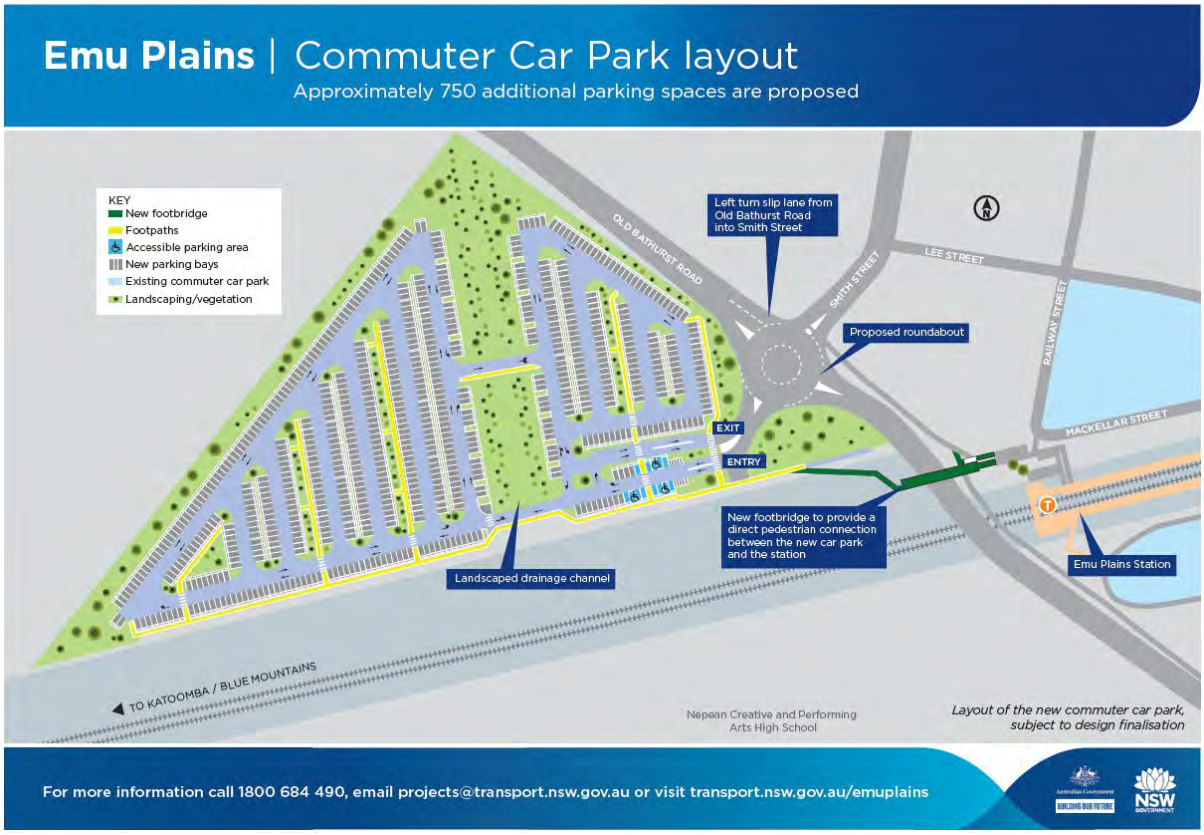

As confirmed by representatives of Penrith City Council during consultation that ***no*** formal traffic impact assessment report of the potential impacts of the new **750 space** commuter car park has been provided by Transport for NSW for review by Council.

3.2 158 – 164 Old Bathurst Road Emu Plains Industrial Precinct Traffic Impact Assessment Report – SCT Consulting 6 April 2022

This traffic impact assessment report was undertaken on behalf of Penrith City Council for a large council owned parcel of land located within Old Bathurst Road to assess the potential traffic impacts of the redevelopment of the site to provide some 40 industrial developable lots.

Figure 7 – 158 – 164 Old Bathurst Road (Site D) Proposed Industrial Development

The traffic report estimated a total potential GFA of some **71,000 m²** resulting in a ***net*** traffic generation increase of **405 vehicles** and **437 vehicles** at full occupation in the weekday AM and PM peak hour respectively.

As shown above in **Figure 7** the Council owned development site would be located directly adjacent to the proposed 750 space Emu Plains Railway Station commuter car park (Site E).

In terms of access arrangements of the site, the proposal included the following:

The existing access on Old Bathurst Road would be converted to a left-in/left-out access. A deceleration lane (70 m) and an acceleration lane (150 m) are provided to ensure there is enough distance for heavy vehicles to diverge and merge with existing traffic on Old Bathurst Road. The design of the access will preclude any right turn movements in and out of the site.

The western access is proposed on David Road with all movements permitted. This access is then connected with the upgraded intersection of David Road/Old Bathurst Road for strategic access (with all movements permitted).[1]
The traffic report included morning / afternoon peak hour counts / modelling at a number of intersections surrounding the site including the roundabout at Old Bathurst Road / Russell Street. These were:

- Old Bathurst Road/Russell Street
- Old Bathurst Road/David Road
- Old Bathurst Road/site access road
- Old Bathurst Road/Smith Street/commuter car park access road
- Old Bathurst Road/Great Western Highway.

[1] 158 – 164 Old Bathurst Road Emu Plains Industrial Precinct Traffic Impact Assessment Report – SCT Consulting 6 April 2022

The intersection surveys were conducted on **16 Nov 2021** for Old Bathurst Road/Russell Street and Old Bathurst Road/David Road, and **22 July 2020** for Old Bathurst Road/Smith Street and Great Western Highway/Old Bathurst Road.

Existing Intersection Operating Conditions

The traffic report found the following 'existing' intersection operating conditions using SIDRA:

Table 2-7 Existing intersection performance (2021)

Intersection	Weekday AM peak			Weekday PM peak		
	Delay	LoS	DoS	Delay	LoS	DoS
Old Bathurst Road/Russell Street	27.1s	B	0.88	104.6s	F	1.05
Old Bathurst Road/David Road	34.0s	C	0.42	19.2s	B	0.40
Old Bathurst Road/site access road	9.4s	A	0.42	9.5s	A	0.43
Old Bathurst Road/Smith Street	13.3s	A	0.44	9.1s	A	0.39
Great Western Highway/Old Bathurst Road	25.2s	B	0.69	21.5s	B	0.75

Source: SCT Consulting, 2021

The SIDRA results indicate that all intersections are operating at a satisfactory level of service (LoS C or better) other than Old Bathurst Road/Russell Street roundabout during the PM peak hour, which will be operating at capacity with a DoS of 1.05 and LoS F. All other intersections will have reserve capacity to accommodate some future growth.

It is noted that in the PM peak the intersection of Old Bathurst Road / Russell Street operated at a poor level of service.

Future Year Intersection Operating Conditions

The traffic report [2] included the potential traffic generation of the commuter car park and assumed 750 trips in the AM peak hour for modelling purposes. Further, the traffic report assumed a 2% per annum growth rate to traffic volumes recorded in 2020 / 2021 to obtain development + future year intersection operating conditions.

On the matter of the distribution of generated trips, the report stated the following:

For worst-case analysis, it is assumed that all development traffic would access/exit the site via Old Bathurst Road/David Road. Traffic to and from the west would access via the south of Old Bathurst Road/Russell Street, while traffic to and from the east would access via the north of Great Western Highway/Old Bathurst Road. A directional split of 90 per cent inbound / 10 per cent outbound was assumed for the AM peak, and vice versa for the PM peak.

[2] 158 – 164 Old Bathurst Road Emu Plains Industrial Precinct Traffic Impact Assessment Report – SCT Consulting 6 April 2022

Table 4-2 Traffic distribution

Peak Period	Origin / Destination split (%)*		Directional split (%)	
	East	West	In	Out
AM	46	54	90	10
PM	46	54	10	90

*The distribution has considered the residential location of local workers and anticipated routings including:

- Penrith: 54% (1/3 from Russell street, 2/3 from Great Western Highway east)
- Blacktown: 12% (half from Russell street via M4, half from Great Western Highway east)
- Blue Mountains: 10% (from Russell street via M4)
- Hawkesbury: 4% (from Great Western Highway east)
- Liverpool: 2% (from Russell street via M4)
- Fairfield: 2% (from Russell street via M4)
- Other Local Government Areas are below 2% each across Sydney (from Russell street via M4).

Applying the above assumptions, the traffic report found the following future year intersection operating conditions assuming existing intersections remain in their current form.

Table 4-3 Future year intersection performance (2033)

Intersection	Future year base case			Future year with development		
	Delay	LoS	DoS	Delay	LoS	DoS
Weekday AM Peak						
Old Bathurst Road/Russell Street	89.5s	F	1.19	225.6s	F	1.60
Old Bathurst Road/David Road*	10.7s	A	0.59	12.3s	A	0.59
Old Bathurst Road/site access road	9.5s	A	0.58	10.4s	A	0.59
Old Bathurst Road/Smith Street	22.5s	B	0.65	24.1s	B	0.78
Great Western Highway/Old Bathurst Road	32.0s	C	0.87	37.0s	C	0.92
Weekday PM Peak						
Old Bathurst Road/Russell Street	165.0s	F	1.37	343.1s	F	1.36
Old Bathurst Road/David Road	29.2s	C	0.57	304.9s	F	1.29
Old Bathurst Road/site access road	11.3s	A	0.60	14.0s	A	0.61
Old Bathurst Road/Smith Street	22.5s	B	0.73	23.8s	B	0.74
Great Western Highway/Old Bathurst Road	26.2s	B	0.88	26.6s	B	0.88

*The south approach documents a 64 and 71 seconds delay, resulting in LoS E and F for the whole intersection performance in the two scenarios. Given the demand is low (16 and 35 vehicles), this movement is disregarded and the second worst movement is reported as the entire intersection.

It is noted that the roundabout at Old Bathurst Road / Russell Street would fail in the future in both peak periods. Other intersections would continue to operate at a satisfactory level of service in the future.

Adopted Intersection Upgrade Arrangements

As stated above, the traffic report noted the upgrade of the intersection of Old Bathurst Road / Russell Street in the existing Penrith City Council area wide contributions plan to traffic signals. On

this basis, the traffic report modelled the following signalised intersection operating arrangements under traffic signal control. The report also included upgrade options maintaining the existing roundabout in the form of additional approach lanes / expansion of the roundabout to a dual lane roundabout which did not yield satisfactory future year intersection operating conditions.

Figure 8 – Adopted Old Bathurst Road / Russell Street Adopted Signalised Intersection Configuration

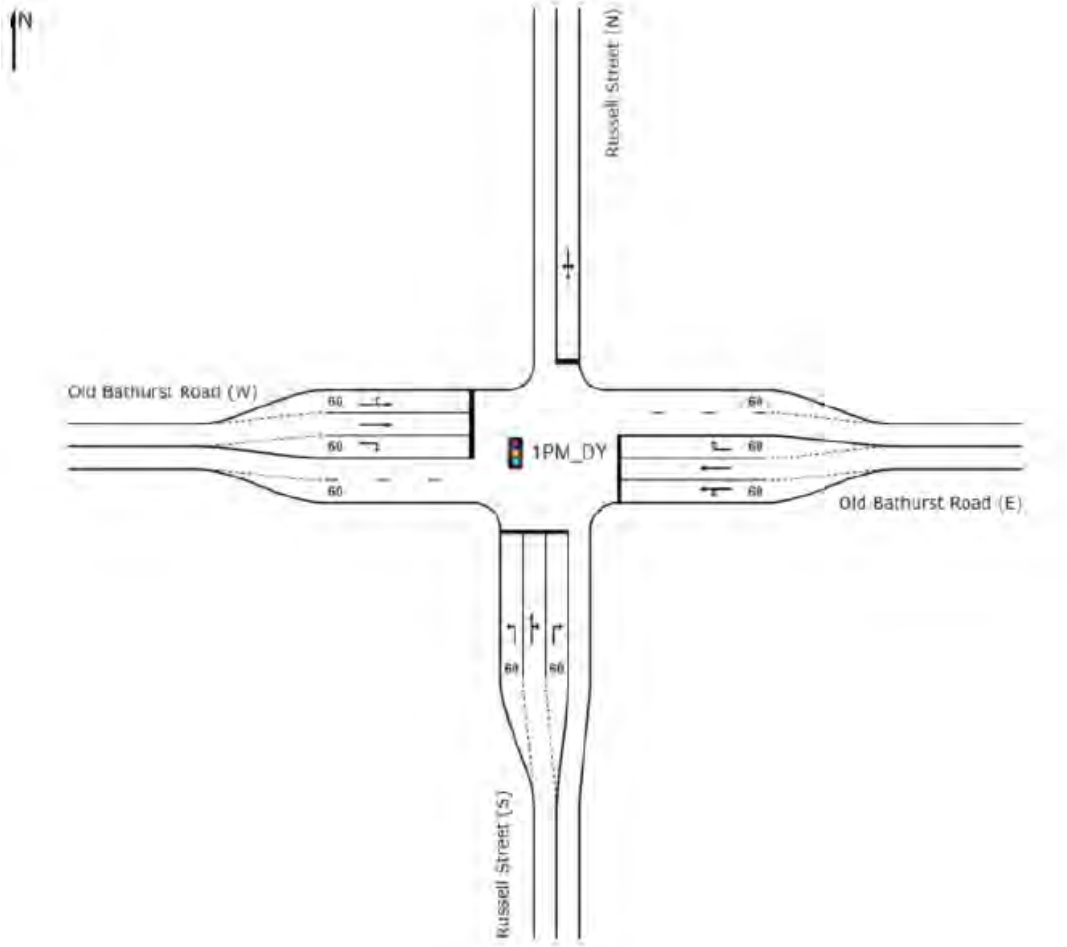

The report found the following future year intersection operating conditions under traffic signal control with *all* traffic generated by both the 750-space commuter car park and the Council owned development at the site of No.158-164 Old Bathurst Road for the PM peak hour. It is noted that the AM peak hour was not included in the table presented below.

Table 4-4 Future year intersection performance with upgrades (2033)

Intersection	Future year			Future year with development		
	Delay	LoS	DoS	Delay	LoS	DoS
Weekday AM Peak						
Old Bathurst Road/Russell Street (upgraded roundabout)	32.5s	C	0.93	49.7s	D	0.96
Old Bathurst Road/Russell Street (signal)	37.7s	C	0.82	50.1s	D	0.96
Old Bathurst Road/David Road (roundabout)	Not required			15.0s	B	0.88
Old Bathurst Road/David Road (signals)	Not required			20.5s	B	0.89
Weekday PM Peak						
Old Bathurst Road/Russell Street(upgraded roundabout)	36.6s	C	0.87	48.9s	D	1.00
Old Bathurst Road/Russell Street (signal)	42.8s	D	0.93	52.3s	D	0.96
Old Bathurst Road/David Road (roundabout)	Not required			34.3s	C	0.76
Old Bathurst Road/David Road (signals)	Not required			27.2s	B	0.86

Thus, it is noted that as an upgraded traffic signal control intersection as listed in Council's contribution plan, the intersection of Old Bathurst Road / Russell Street would operate at a satisfactory level of service in the future.

On the matter of potential traffic impacts of the proposal, it is noted the traffic report stated the following:

It is noted that Council has been levying contributions for the signal at the intersection of Old Bathurst Road/Russell Street under the Section 7.12 Development Contributions Plan, hence it is most likely that a traffic signal will be constructed at this location to cater for background traffic growth and further development. A signalised intersection for Old Bathurst Road/David Road would also improve pedestrian/cyclist safety and indicates better operation performance, hence is recommended. There is no spacing issue with the two potential signalised intersections at Russell Street and David Road, i.e. being about 780m to each other.

As part of preparing this traffic impact assessment, Positive Traffic Pty Ltd obtained electronic copies of the SIDRA files presented above from Penrith City Council to use as a basis of modelling impacts of the proposal subject to this report.

4. The Proposed Development

The key components of the proposed development are summarised below

- Rezoning of the existing portion of land from 'Rural D Future Urban' to 'IN2 Light Industrial' across the site as a whole.
- *Single* entry / exit driveway access in Old Bathurst Road proposed to be located some distance east of the intersection of Old Bathurst Road / Russell Street.
- *Single* entry / exit driveway in Russell Street for light vehicle access to north / eastern corner of the site (development fronting Russell Street only) with no access by large vehicles at this location.

The resulting zoning across the subject site is shown below in **Figure 9**.

Figure 9 – Resultant Site Zoning

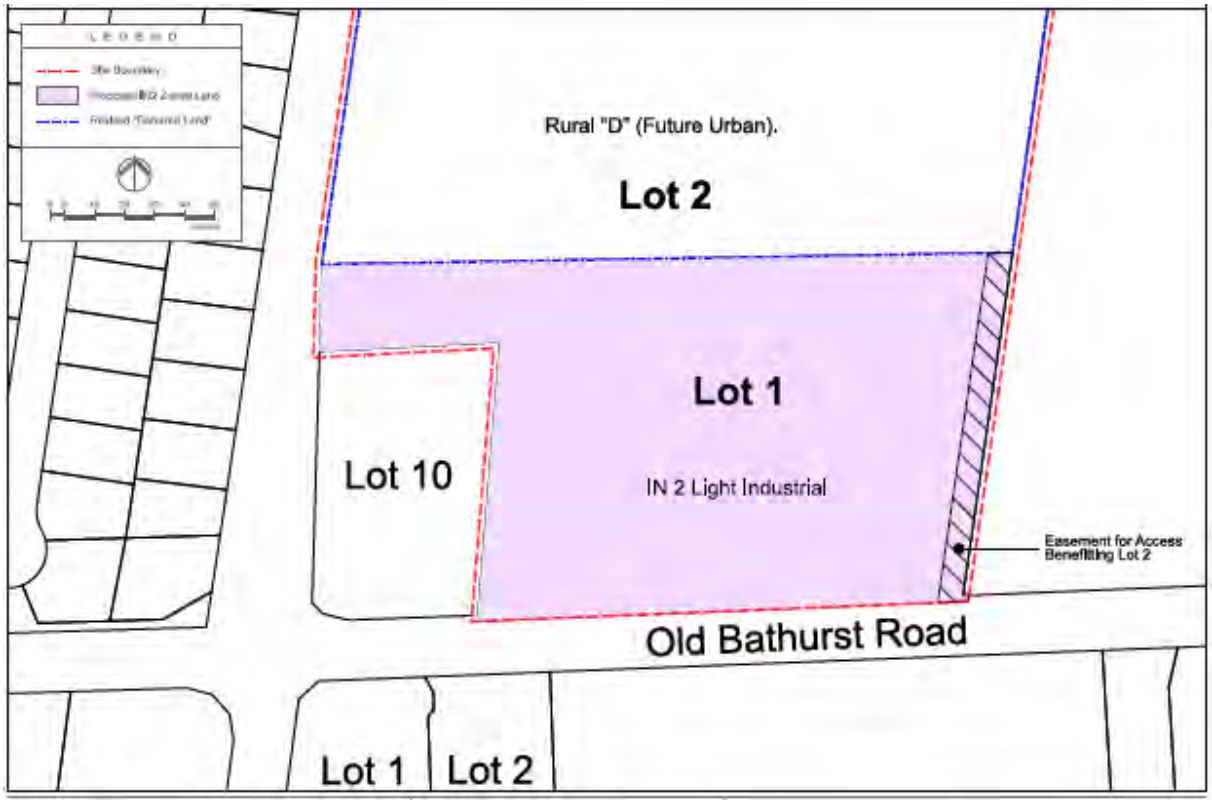

For the purpose of assessing the traffic impacts of this rezoning proposal, (as shown in the preliminary arrangement plans shown in **Appendix B** of this report), a potential yield of 10,400m² of warehouse space and 1,540m² of ancillary office space (total 11,940m²) has been adopted.

5. Potential Traffic Impacts

5.1 Introduction

The following presents an assessment of the potential traffic impacts of the proposal using the Roads and Traffic Authority Guide to Traffic Generating Developments standard approach.

5.2 Development Traffic Generation

Applying the Transport for NSW Technical Direction TDT2013/04a rate to the potential total GFA industrial development yield of 11,940m2, the total site generation of Lot 1 would equate to **62 AM Peak** trips two way and **67 PM Peak** trips two way.

Noting that the site is currently a greenfield site and despite an existing zoning arrangement which allows for a large portion of the site to be redeveloped for industrial development, to ensure a conservative estimate of future year traffic conditions the *full* traffic generation of the site has been added to the road network.

5.3 Trip Distribution

As stated above Old Bathurst Road would provide the main access to the site and thus the distribution of trips has adopted the same AM / PM peak trip distribution adopted in the SCT Traffic Impact Assessment report[3] undertaken for the Penrith City Council development site at No.158 – 164 Old Bathurst Road.

The adopted distribution of generated trips is shown in **Figure 10**.

Figure 10 – Adopted Trip Distribution

[3] 158 – 164 Old Bathurst Road Emu Plains Industrial Precinct Traffic Impact Assessment Report – SCT Consulting 6 April 2022

The resulting additional trips on Old Bathurst Road is shown in **Figure 11**.

Figure 11 – Resultant Distribution of Trips by Approach Road

5.4 Future Year Intersection Operating Conditions

The SCT report included SIDRA output tables (**Appendix A**) which provide forecast traffic volumes for the intersection of Old Bathurst Road / Russell Street as an upgraded traffic signal-controlled intersection which included the following traffic generating developments / growth:

- Development site at No.1-4 Old Bathurst Road;
- Proposed 750 space commuter car park; and
- 2% per annum growth.

The intersection of Old Bathurst Road / Russell Street has been analysed using the Sidra Intersection analysis program. Sidra Intersection determines the average delay that vehicles encounter, the degree of saturation of the intersection, and the level of service. The degree of saturation is the ratio of the arrival rate of vehicles to the capacity of the approach. Sidra Intersection provides analysis of the operating conditions which can be compared to the performance criteria set out in **Table 2**.

Table 2 – Level of Service Criteria

Level of Service	Average Delay per Vehicle (secs/veh)	Signals & Roundabouts	Give Way & Stop Signs
A	less than 14	Good operation	Good operation
B	15 to 28	Good with acceptable delays & spare capacity	Acceptable delays & Spare capacity
C	29 to 42	Satisfactory	Satisfactory, but accident study required
D	43 to 56	Operating near capacity	Near capacity & accident study required
E	57 to 70	At capacity; at signals, incidents will cause excessive delays Roundabouts require other control mode	At capacity, requires other control mode
F	> 70	Extra capacity required	Extreme delay, traffic signals or other major treatment required

Adapted from RTA Guide to Traffic Generating Developments, 2002.

For roundabouts and priority intersections, the reported average delay is for the individual movement with the highest average delay per vehicle. At signalised intersections, the reported average delay is over all movements.

The future year weekday and weekend day intersection operating conditions are presented in Error! Reference source not found.. Average delay is expressed in seconds per vehicle.

The additional traffic generated by the development has been added to the intersection with the trip distribution described above and assuming the same distribution through the intersection itself as which currently occurs. The resulting 2033 intersection performance conditions are presented below in **Table 3**.

Table 3 – Future Year (2033) Weekday AM / PM Intersection Operating Conditions

Intersection	Control	Morning Peak		Evening Peak	
		Av Delay	LOS	Av Delay	LOS
2033 + Commuter Car Park + 158-164 Old Bathurst Rd	Signals	50.1	D	52.0	D
2033 + Commuter Car Park + 158-164 Old Bathurst Rd + 1-4 Old Bathurst Rd	Signals	53.8	D	54.3	D

Avg Delay (sec/veh) is over all movements at signals, and for worst movement at priority and roundabouts

From Table 3 it is noted that the additional traffic generated by the development at No.1-4 Bathurst Street would result in only a minor change to intersection operating conditions at the signalised intersection of Old Bathurst Road / Russell Street in the year 2033 assuming full development of known sites described above and 2% growth rate for a 10 year period. Further, no additional upgrade of the intersection arrangements as identified in the SCT traffic report would be necessary to accommodate the traffic generation of the development through the intersection of Old Bathurst Road / Russell Street.

Overall, the potential traffic impacts of the proposed rezoning are considered acceptable.

SIDRA outputs are provided in **Appendix C** of this report.

5.5 Active Transport Assessment

The Penrith Accessible Trails Hierarchy (2009) report indicates the footpath along Old Bathurst Road as a 'Priority Pathway' with a potential to upgrade. There is the opportunity for provision of a shared pathway through the provision of an appropriate width path to facilitate future pedestrian / cycle trips between the site and Emu Plains Station / Penrith to the east.

It is noted that a new footbridge over Old Bathurst Road will be provided to ensure safe and direct pedestrian access between the new Emu Plains Commuter Car Park (neighbouring site to the east) and the station.

It is also noted that the Planning Proposal offers the opportunity to facilitate delivery of an upgraded pedestrian and cycle path in conjunction with a future Development Application for the site along the site frontage. A future Development Application will incorporate the construction of kerb and gutter along the Old Bathurst Road frontage, and streetscape works including pedestrian / cycle path, and verge landscaping.

In addition, the existing footpath connection along Russell Street is situated on the western side of the roadway, servicing the residential areas to the west, and providing a direct linkage to the Emu Green Reserve open space area.

The Planning Proposal is able to facilitate delivery of a green link along Russell Street in conjunction with a future Development Application for the site.

A future Development Application will incorporate the delivery of streetscape landscaping works, street trees and verge landscaping.

The verge on Russell Street is able to accommodate a new pedestrian and cycle link if required along the frontage of the site where the rezoning applies. This would be delivered as part of a future Development Application.

It is expected due to the nature of the development that the additional number of pedestrian / cycle trips during peak hours would be very low. Thus, it is not expected that the development would have a significant impact on the current / future active transport network. Further, the Planning Proposal is consistent with, and will enable delivery of the Green Grid Strategy as it applies to landscape and pedestrian connections surrounding the site.

6. Parking and Access Review

6.1 Council DCP Parking Provision

It is expected that future development applications of each component of the development would provide parking in accordance with the requirements of Penrith City Councils DCP.

7. Conclusions

This report has reviewed the potential traffic impacts of the proposed rezoning of a portion of the site known as Lot 1 1-4 Old Bathurst Road, Emu Plains to provide light industrial zoning across the site as a whole. The findings of this assessment are presented below:

1. The potential traffic generation of the development would be very low in the context of existing traffic demands on the immediate surrounding road network.
2. The future year (2033) intersection operating conditions at Old Bathurst Road / Russell Street would be similar to that which is estimated to occur in 2033 without the rezoning proposal additional traffic.
3. The forecast 2033 traffic conditions which incorporated the traffic generation of all known developments including the subject site and a 2% per annum growth till 2033 at the upgraded intersection of Old Bathurst Road / Russell Street would be similar to that which was estimated without the development proposal.
4. The proposed parking provision of the proposal is expected to comply with the requirements of Penrith City Council's DCP.

Overall the traffic impacts of the proposal are considered minimal.

8. Appendix A – Intersection Count

Job No.	: AUNSW775
Client	: The Trustee for Positive Traffic Trust
Suburb	: Old Bathurst Road
Location	: 1. Old Bathurst Rd / Russell St
Day/Date	: Wed, 28th April 2021
Weather	: Fine
Description	: Classified Intersection Count
	: 15 mins Data

	Class 1	Class 2
Classifications	Lights	Heavies

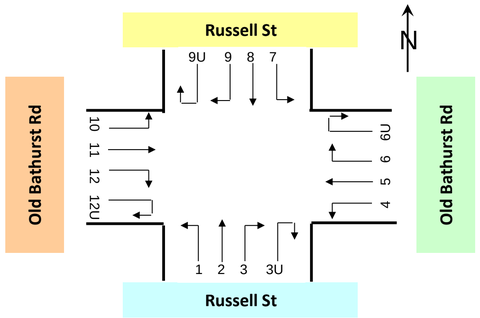

Approach	Russell St												Old Bathurst Rd											
Direction	Direction 1 (Left Turn)			Direction 2 (Through)			Direction 3 (Right Turn)			Direction 3U (U Turn)			Direction 4 (Left Turn)			Direction 5 (Through)			Direction 6 (Right Turn)			Direction 6U (U Turn)		
Time Period	Lights	Heavies	Total	Lights	Heavies	Total	Lights	Heavies	Total	Lights	Heavies	Total	Lights	Heavies	Total	Lights	Heavies	Total	Lights	Heavies	Total	Lights	Heavies	Total
6:30 to 6:45	19	1	**20**	1	0	**1**	70	5	**75**	3	1	**4**	17	5	**22**	39	4	**43**	5	1	**6**	2	0	**2**
6:45 to 7:00	20	3	**23**	5	0	**5**	70	3	**73**	3	1	**4**	24	12	**36**	33	1	**34**	2	0	**2**	2	0	**2**
7:00 to 7:15	20	1	**21**	9	0	**9**	44	9	**53**	2	1	**3**	26	6	**32**	31	0	**31**	2	0	**2**	1	0	**1**
7:15 to 7:30	19	4	**23**	5	0	**5**	46	5	**51**	2	0	**2**	25	8	**33**	35	1	**36**	4	0	**4**	1	0	**1**
7:30 to 7:45	21	0	**21**	7	1	**8**	66	11	**77**	3	0	**3**	14	2	**16**	45	1	**46**	7	0	**7**	2	1	**3**
7:45 to 8:00	18	2	**20**	4	0	**4**	78	3	**81**	4	1	**5**	22	2	**24**	50	1	**51**	4	0	**4**	7	0	**7**
8:00 to 8:15	20	1	**21**	7	0	**7**	68	7	**75**	1	0	**1**	22	5	**27**	47	2	**49**	3	0	**3**	8	0	**8**
8:15 to 8:30	33	1	**34**	10	0	**10**	90	7	**97**	10	0	**10**	23	4	**27**	63	1	**64**	8	0	**8**	6	1	**7**
8:30 to 8:45	43	3	**46**	14	0	**14**	77	9	**86**	2	0	**2**	30	2	**32**	57	2	**59**	11	0	**11**	1	0	**1**
8:45 to 9:00	27	3	**30**	8	0	**8**	45	9	**54**	1	0	**1**	29	11	**40**	60	4	**64**	8	0	**8**	1	0	**1**
9:00 to 9:15	30	4	**34**	14	0	**14**	32	11	**43**	4	1	**5**	29	7	**36**	40	1	**41**	3	0	**3**	1	0	**1**
9:15 to 9:30	43	3	**46**	6	0	**6**	33	5	**38**	3	1	**4**	23	11	**34**	45	1	**46**	5	0	**5**	1	0	**1**
AM Totals	**313**	**26**	**339**	**90**	**1**	**91**	**719**	**84**	**803**	**38**	**6**	**44**	**284**	**75**	**359**	**545**	**19**	**564**	**62**	**1**	**63**	**33**	**2**	**35**
15:30 to 15:45	52	1	**53**	24	0	**24**	32	7	**39**	9	0	**9**	91	9	**100**	124	1	**125**	10	1	**11**	4	0	**4**
15:45 to 16:00	52	5	**57**	21	2	**23**	26	13	**39**	10	1	**11**	40	4	**44**	134	1	**135**	18	1	**19**	2	0	**2**
16:00 to 16:15	51	2	**53**	27	0	**27**	37	6	**43**	6	1	**7**	52	5	**57**	147	1	**148**	18	0	**18**	3	1	**4**
16:15 to 16:30	52	6	**58**	26	0	**26**	34	8	**42**	7	0	**7**	34	7	**41**	158	2	**160**	28	1	**29**	0	0	**0**
16:30 to 16:45	59	6	**65**	16	2	**18**	38	10	**48**	6	0	**6**	45	5	**50**	160	0	**160**	24	0	**24**	2	0	**2**
16:45 to 17:00	55	1	**56**	33	1	**34**	32	6	**38**	4	0	**4**	32	3	**35**	152	1	**153**	21	0	**21**	1	0	**1**
17:00 to 17:15	53	1	**54**	26	1	**27**	26	4	**30**	5	0	**5**	49	3	**52**	160	2	**162**	28	1	**29**	1	0	**1**
17:15 to 17:30	78	1	**79**	24	1	**25**	22	3	**25**	8	0	**8**	28	1	**29**	167	0	**167**	23	0	**23**	5	0	**5**
17:30 to 17:45	57	0	**57**	35	0	**35**	19	2	**21**	4	0	**4**	37	3	**40**	159	1	**160**	27	0	**27**	2	0	**2**
17:45 to 18:00	53	1	**54**	28	1	**29**	23	3	**26**	4	0	**4**	18	3	**21**	144	0	**144**	27	0	**27**	3	0	**3**
18:00 to 18:15	68	0	**68**	27	0	**27**	23	1	**24**	5	0	**5**	26	0	**26**	131	0	**131**	18	0	**18**	0	0	**0**
18:15 to 18:30	70	2	**72**	16	0	**16**	19	5	**24**	3	0	**3**	16	2	**18**	107	0	**107**	16	0	**16**	2	0	**2**
PM Totals	**700**	**26**	**726**	**303**	**8**	**311**	**331**	**68**	**399**	**71**	**2**	**73**	**468**	**45**	**513**	**1,743**	**9**	**1,752**	**258**	**4**	**262**	**25**	**1**	**26**

Approach	Russell St												Old Bathurst Rd											
Direction	Direction 7 (Left Turn)			Direction 8 (Through)			Direction 9 (Right Turn)			Direction 9U (U Turn)			Direction 10 (Left Turn)			Direction 11 (Through)			Direction 12 (Right Turn)			Direction 12U (U Turn)		
Time Period	Lights	Heavies	Total	Lights	Heavies	Total	Lights	Heavies	Total	Lights	Heavies	Total	Lights	Heavies	Total	Lights	Heavies	Total	Lights	Heavies	Total	Lights	Heavies	Total
6:30 to 6:45	11	0	**11**	14	0	**14**	2	0	**2**	0	0	**0**	0	1	**1**	96	0	**96**	37	1	**38**	0	0	**0**
6:45 to 7:00	12	2	**14**	15	1	**16**	4	1	**5**	0	0	**0**	1	0	**1**	111	1	**112**	59	3	**62**	0	0	**0**
7:00 to 7:15	11	0	**11**	16	0	**16**	4	0	**4**	0	1	**1**	0	0	**0**	114	2	**116**	55	5	**60**	0	1	**1**
7:15 to 7:30	20	0	**20**	13	4	**17**	4	1	**5**	0	0	**0**	0	0	**0**	165	4	**169**	79	3	**82**	0	0	**0**
7:30 to 7:45	32	1	**33**	23	1	**24**	5	0	**5**	0	0	**0**	0	0	**0**	162	2	**164**	49	0	**49**	0	0	**0**
7:45 to 8:00	18	0	**18**	25	3	**28**	3	0	**3**	0	0	**0**	0	0	**0**	186	2	**188**	39	2	**41**	0	0	**0**
8:00 to 8:15	23	0	**23**	16	2	**18**	2	0	**2**	0	0	**0**	2	0	**2**	169	0	**169**	54	0	**54**	0	0	**0**
8:15 to 8:30	23	0	**23**	36	0	**36**	10	0	**10**	1	0	**1**	0	0	**0**	125	2	**127**	56	0	**56**	0	0	**0**
8:30 to 8:45	24	0	**24**	19	1	**20**	1	0	**1**	0	0	**0**	0	0	**0**	130	2	**132**	79	0	**79**	0	0	**0**
8:45 to 9:00	16	1	**17**	16	2	**18**	2	1	**3**	0	0	**0**	0	0	**0**	118	1	**119**	74	4	**78**	1	0	**1**
9:00 to 9:15	15	0	**15**	11	0	**11**	1	0	**1**	0	0	**0**	2	0	**2**	110	1	**111**	56	2	**58**	2	0	**2**
9:15 to 9:30	13	0	**13**	14	0	**14**	3	1	**4**	0	0	**0**	1	0	**1**	97	0	**97**	53	1	**54**	1	0	**1**
AM Totals	**218**	**4**	**222**	**218**	**14**	**232**	**41**	**4**	**45**	**1**	**1**	**2**	**6**	**1**	**7**	**1,583**	**17**	**1,600**	**690**	**21**	**711**	**4**	**1**	**5**
15:30 to 15:45	14	1	**15**	6	1	**7**	1	1	**2**	0	0	**0**	4	0	**4**	82	0	**82**	51	5	**56**	0	0	**0**
15:45 to 16:00	11	0	**11**	12	0	**12**	1	2	**3**	0	0	**0**	1	0	**1**	65	0	**65**	48	3	**51**	0	0	**0**
16:00 to 16:15	16	0	**16**	19	0	**19**	3	0	**3**	0	0	**0**	1	0	**1**	69	0	**69**	48	1	**49**	2	0	**2**
16:15 to 16:30	13	1	**14**	11	0	**11**	3	1	**4**	0	0	**0**	0	0	**0**	63	0	**63**	35	0	**35**	0	0	**0**
16:30 to 16:45	14	0	**14**	11	1	**12**	1	1	**2**	0	0	**0**	0	0	**0**	74	2	**76**	50	0	**50**	1	0	**1**
16:45 to 17:00	19	0	**19**	11	2	**13**	1	0	**1**	0	0	**0**	1	0	**1**	59	0	**59**	56	0	**56**	3	0	**3**
17:00 to 17:15	16	0	**16**	15	2	**17**	2	0	**2**	0	0	**0**	0	0	**0**	63	1	**64**	63	2	**65**	0	0	**0**
17:15 to 17:30	9	0	**9**	18	1	**19**	3	0	**3**	0	0	**0**	1	0	**1**	56	0	**56**	60	2	**62**	2	0	**2**
17:30 to 17:45	9	0	**9**	8	0	**8**	4	0	**4**	1	0	**1**	2	0	**2**	56	0	**56**	35	0	**35**	0	0	**0**
17:45 to 18:00	7	0	**7**	15	1	**16**	6	0	**6**	0	0	**0**	0	0	**0**	61	0	**61**	52	0	**52**	1	0	**1**
18:00 to 18:15	9	0	**9**	10	1	**11**	2	0	**2**	0	0	**0**	6	0	**6**	44	0	**44**	48	1	**49**	1	0	**1**
18:15 to 18:30	13	0	**13**	16	1	**17**	0	0	**0**	0	0	**0**	4	0	**4**	66	0	**66**	42	0	**42**	0	0	**0**
PM Totals	**150**	**2**	**152**	**152**	**10**	**162**	**27**	**5**	**32**	**1**	**0**	**1**	**20**	**0**	**20**	**758**	**3**	**761**	**588**	**14**	**602**	**10**	**0**	**10**

Job No. : AUNSW775
Client : The Trustee for Positive Traffic Trust
Suburb : Old Bathurst Road
Location : 1. Old Bathurst Rd / Russell St

Day/Date : Wed, 28th April 2021
Weather : Fine
Description : Classified Intersection Count
: Hourly Summary

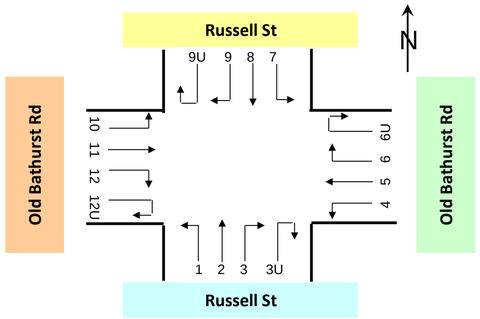

MATRIX Traffic and Transport Data

Approach	Russell St												Old Bathurst Rd											
Direction	Direction 1 (Left Turn)			Direction 2 (Through)			Direction 3 (Right Turn)			Direction 3U (U Turn)			Direction 4 (Left Turn)			Direction 5 (Through)			Direction 6 (Right Turn)			Direction 6U (U Turn)		
Time Period	Lights	Heavies	Total	Lights	Heavies	Total	Lights	Heavies	Total	Lights	Heavies	Total	Lights	Heavies	Total	Lights	Heavies	Total	Lights	Heavies	Total	Lights	Heavies	Total
6:30 to 7:30	78	9	**87**	20	0	**20**	230	22	**252**	10	3	**13**	92	31	**123**	138	6	**144**	13	1	**14**	6	0	**6**
6:45 to 7:45	80	8	**88**	26	1	**27**	226	28	**254**	10	2	**12**	89	28	**117**	144	3	**147**	15	0	**15**	6	1	**7**
7:00 to 8:00	78	7	**85**	25	1	**26**	234	28	**262**	11	2	**13**	87	18	**105**	161	3	**164**	17	0	**17**	11	1	**12**
7:15 to 8:15	78	7	**85**	23	1	**24**	258	26	**284**	10	1	**11**	83	17	**100**	177	5	**182**	18	0	**18**	18	1	**19**
7:30 to 8:30	92	4	**96**	28	1	**29**	302	28	**330**	18	1	**19**	81	13	**94**	205	5	**210**	22	0	**22**	23	2	**25**
7:45 to 8:45	114	7	**121**	35	0	**35**	313	26	**339**	17	1	**18**	97	13	**110**	217	6	**223**	26	0	**26**	22	1	**23**
8:00 to 9:00	123	8	**131**	39	0	**39**	280	32	**312**	14	0	**14**	104	22	**126**	227	9	**236**	30	0	**30**	16	1	**17**
8:15 to 9:15	133	11	**144**	46	0	**46**	244	36	**280**	17	1	**18**	111	24	**135**	220	8	**228**	30	0	**30**	9	1	**10**
8:30 to 9:30	143	13	**156**	42	0	**42**	187	34	**221**	10	2	**12**	111	31	**142**	202	8	**210**	27	0	**27**	4	0	**4**
AM Totals	**313**	**26**	**339**	**90**	**1**	**91**	**719**	**84**	**803**	**38**	**6**	**44**	**284**	**75**	**359**	**545**	**19**	**564**	**62**	**1**	**63**	**33**	**2**	**35**
15:30 to 16:30	207	14	**221**	98	2	**100**	129	34	**163**	32	2	**34**	217	25	**242**	563	5	**568**	74	3	**77**	9	1	**10**
15:45 to 16:45	214	19	**233**	90	4	**94**	135	37	**172**	29	2	**31**	171	21	**192**	599	4	**603**	88	2	**90**	7	1	**8**
16:00 to 17:00	217	15	**232**	102	3	**105**	141	30	**171**	23	1	**24**	163	20	**183**	617	4	**621**	91	1	**92**	6	1	**7**
16:15 to 17:15	219	14	**233**	101	4	**105**	130	28	**158**	22	0	**22**	160	18	**178**	630	5	**635**	101	2	**103**	4	0	**4**
16:30 to 17:30	245	9	**254**	99	5	**104**	118	23	**141**	23	0	**23**	154	12	**166**	639	3	**642**	96	1	**97**	9	0	**9**
16:45 to 17:45	243	3	**246**	118	3	**121**	99	15	**114**	21	0	**21**	146	10	**156**	638	4	**642**	99	1	**100**	9	0	**9**
17:00 to 18:00	241	3	**244**	113	3	**116**	90	12	**102**	21	0	**21**	132	10	**142**	630	3	**633**	105	1	**106**	11	0	**11**
17:15 to 18:15	256	2	**258**	114	2	**116**	87	9	**96**	21	0	**21**	109	7	**116**	601	1	**602**	95	0	**95**	10	0	**10**
17:30 to 18:30	248	3	**251**	106	1	**107**	84	11	**95**	16	0	**16**	97	8	**105**	541	1	**542**	88	0	**88**	7	0	**7**
PM Totals	**700**	**26**	**726**	**303**	**8**	**311**	**331**	**68**	**399**	**71**	**2**	**73**	**468**	**45**	**513**	**1,743**	**9**	**1,752**	**258**	**4**	**262**	**25**	**1**	**26**

Approach	Russell St												Old Bathurst Rd											
Direction	Direction 7 (Left Turn)			Direction 8 (Through)			Direction 9 (Right Turn)			Direction 9U (U Turn)			Direction 10 (Left Turn)			Direction 11 (Through)			Direction 12 (Right Turn)			Direction 12U (U Turn)		
Time Period	Lights	Heavies	Total	Lights	Heavies	Total	Lights	Heavies	Total	Lights	Heavies	Total	Lights	Heavies	Total	Lights	Heavies	Total	Lights	Heavies	Total	Lights	Heavies	Total
6:30 to 7:30	54	2	**56**	58	5	**63**	14	2	**16**	0	1	**1**	1	1	**2**	486	7	**493**	230	12	**242**	0	1	**1**
6:45 to 7:45	75	3	**78**	67	6	**73**	17	2	**19**	0	1	**1**	1	0	**1**	552	9	**561**	242	11	**253**	0	1	**1**
7:00 to 8:00	81	1	**82**	77	8	**85**	16	1	**17**	0	1	**1**	0	0	**0**	627	10	**637**	222	10	**232**	0	1	**1**
7:15 to 8:15	93	1	**94**	77	10	**87**	14	1	**15**	0	0	**0**	2	0	**2**	682	8	**690**	221	5	**226**	0	0	**0**
7:30 to 8:30	96	1	**97**	100	6	**106**	20	0	**20**	1	0	**1**	2	0	**2**	642	6	**648**	198	2	**200**	0	0	**0**
7:45 to 8:45	88	0	**88**	96	6	**102**	16	0	**16**	1	0	**1**	2	0	**2**	610	6	**616**	228	2	**230**	0	0	**0**
8:00 to 9:00	86	1	**87**	87	5	**92**	15	1	**16**	1	0	**1**	2	0	**2**	542	5	**547**	263	4	**267**	1	0	**1**
8:15 to 9:15	78	1	**79**	82	3	**85**	14	1	**15**	1	0	**1**	2	0	**2**	483	6	**489**	265	6	**271**	3	0	**3**
8:30 to 9:30	68	1	**69**	60	3	**63**	7	2	**9**	0	0	**0**	3	0	**3**	455	4	**459**	262	7	**269**	4	0	**4**
AM Totals	**218**	**4**	**222**	**218**	**14**	**232**	**41**	**4**	**45**	**1**	**1**	**2**	**6**	**1**	**7**	**1,583**	**17**	**1,600**	**690**	**21**	**711**	**4**	**1**	**5**
15:30 to 16:30	54	2	**56**	48	1	**49**	8	4	**12**	0	0	**0**	6	0	**6**	279	0	**279**	182	9	**191**	2	0	**2**
15:45 to 16:45	54	1	**55**	53	1	**54**	8	4	**12**	0	0	**0**	2	0	**2**	271	2	**273**	181	4	**185**	3	0	**3**
16:00 to 17:00	62	1	**63**	52	3	**55**	8	2	**10**	0	0	**0**	2	0	**2**	265	2	**267**	189	1	**190**	6	0	**6**
16:15 to 17:15	62	1	**63**	48	5	**53**	7	2	**9**	0	0	**0**	1	0	**1**	259	3	**262**	204	2	**206**	4	0	**4**
16:30 to 17:30	58	0	**58**	55	6	**61**	7	1	**8**	0	0	**0**	2	0	**2**	252	3	**255**	229	4	**233**	6	0	**6**
16:45 to 17:45	53	0	**53**	52	5	**57**	10	0	**10**	1	0	**1**	4	0	**4**	234	1	**235**	214	4	**218**	5	0	**5**
17:00 to 18:00	41	0	**41**	56	4	**60**	15	0	**15**	1	0	**1**	3	0	**3**	236	1	**237**	210	4	**214**	3	0	**3**
17:15 to 18:15	34	0	**34**	51	3	**54**	15	0	**15**	1	0	**1**	9	0	**9**	217	0	**217**	195	3	**198**	4	0	**4**
17:30 to 18:30	38	0	**38**	49	3	**52**	12	0	**12**	1	0	**1**	12	0	**12**	227	0	**227**	177	1	**178**	2	0	**2**
PM Totals	**150**	**2**	**152**	**152**	**10**	**162**	**27**	**5**	**32**	**1**	**0**	**1**	**20**	**0**	**20**	**758**	**3**	**761**	**588**	**14**	**602**	**10**	**0**	**10**

Job No. : AUNSW775
Client : The Trustee for Positive Traffic Trust
Suburb : Old Bathurst Road
Location : 1. Old Bathurst Rd / Russell St

Day/Date : Wed, 28th April 2021
Weather : Fine
Description : Classified Intersection Count
: Peak Hour Summary

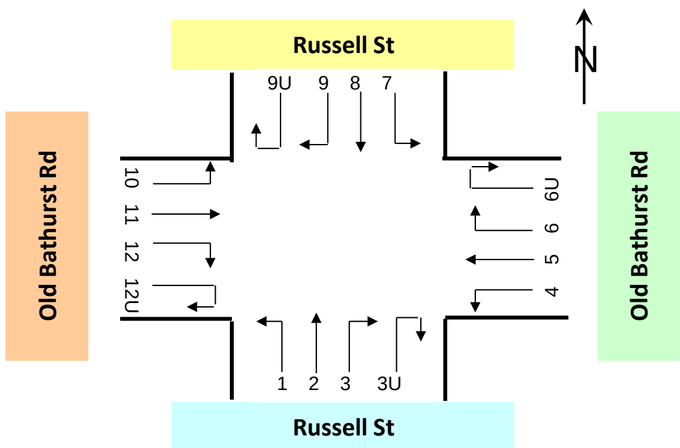

	Approach	Russell St			Old Bathurst Rd			Russell St			Old Bathurst Rd			Grand Total
	Time Period	Lights	Heavies	Total	Lights	Heavies	Total	Lights	Heavies	Total	Lights	Heavies	Total	
AM	7:45 to 8:45	479	34	**513**	362	20	**382**	201	6	**207**	840	8	**848**	**1,950**
PM	16:30 to 17:30	485	37	**522**	898	16	**914**	120	7	**127**	489	7	**496**	**2,059**

Approach	Russell St			Old Bathurst Rd			Russell St			Old Bathurst Rd			Grand Total
Time Period	Lights	Heavies	Total	Lights	Heavies	Total	Lights	Heavies	Total	Lights	Heavies	Total	
6:30 to 7:30	338	34	**372**	249	38	**287**	126	10	**136**	717	21	**738**	**1,533**
6:45 to 7:45	342	39	**381**	254	32	**286**	159	12	**171**	795	21	**816**	**1,654**
7:00 to 8:00	348	38	**386**	276	22	**298**	174	11	**185**	849	21	**870**	**1,739**
7:15 to 8:15	369	35	**404**	296	23	**319**	184	12	**196**	905	13	**918**	**1,837**
7:30 to 8:30	440	34	**474**	331	20	**351**	217	7	**224**	842	8	**850**	**1,899**
7:45 to 8:45	479	34	**513**	362	20	**382**	201	6	**207**	840	8	**848**	**1,950**
8:00 to 9:00	456	40	**496**	377	32	**409**	189	7	**196**	808	9	**817**	**1,918**
8:15 to 9:15	440	48	**488**	370	33	**403**	175	5	**180**	753	12	**765**	**1,836**
8:30 to 9:30	382	49	**431**	344	39	**383**	135	6	**141**	724	11	**735**	**1,690**
AM Totals	**1,160**	**117**	**1,277**	**924**	**97**	**1,021**	**478**	**23**	**501**	**2,283**	**40**	**2,323**	**5,122**
15:30 to 16:30	466	52	**518**	863	34	**897**	110	7	**117**	469	9	**478**	**2,010**
15:45 to 16:45	468	62	**530**	865	28	**893**	115	6	**121**	457	6	**463**	**2,007**
16:00 to 17:00	483	49	**532**	877	26	**903**	122	6	**128**	462	3	**465**	**2,028**
16:15 to 17:15	472	46	**518**	895	25	**920**	117	8	**125**	468	5	**473**	**2,036**
16:30 to 17:30	485	37	**522**	898	16	**914**	120	7	**127**	489	7	**496**	**2,059**
16:45 to 17:45	481	21	**502**	892	15	**907**	116	5	**121**	457	5	**462**	**1,992**
17:00 to 18:00	465	18	**483**	878	14	**892**	113	4	**117**	452	5	**457**	**1,949**
17:15 to 18:15	478	13	**491**	815	8	**823**	101	3	**104**	425	3	**428**	**1,846**
17:30 to 18:30	454	15	**469**	733	9	**742**	100	3	**103**	418	1	**419**	**1,733**
PM Totals	**1,405**	**104**	**1,509**	**2,494**	**59**	**2,553**	**330**	**17**	**347**	**1,376**	**17**	**1,393**	**5,802**

Job No. : AUNSW775
Client : The Trustee for Positive Traffic Trust
Suburb : Old Bathurst Road
Location : 1. Old Bathurst Rd / Russell St

Day/Date : Wed, 28th April 2021
Weather : Fine
Description : Classified Intersection Count
: Intersection Diagram

MATRIX Traffic and Transport Data

Hour Starting: AM Totals
Vehicle Type: All Vehicles

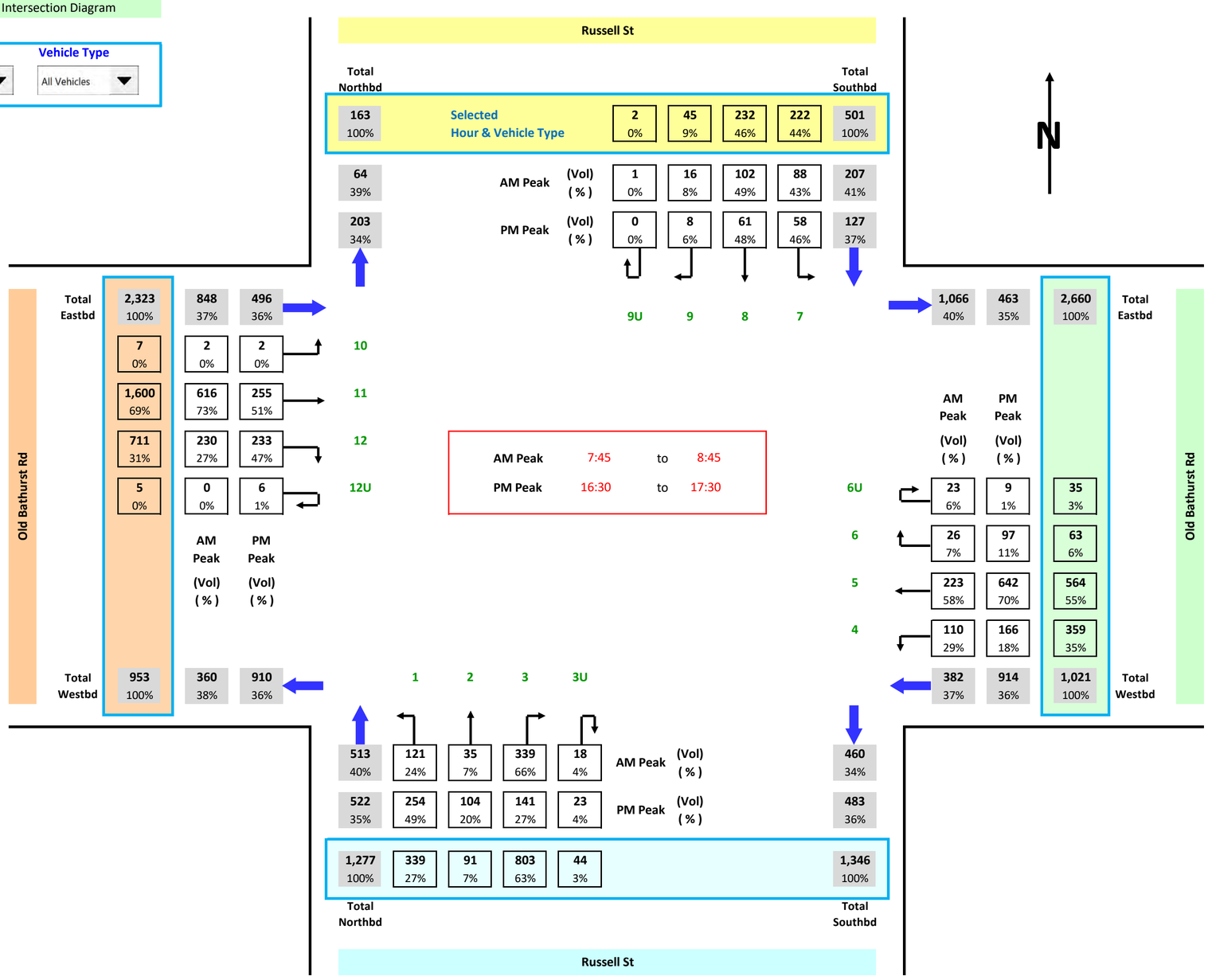

9. Appendix B – Plans of Potential Development

INDICATIVE BUILDING ENVELOPE PLAN

170 RUSSELL STREET
EMU PLAINS

NOTES

Base data supplied by NSW LPI
Projection MGA Zone 56

Areas and dimensions shown are subject to final survey calculations.
All carriageways are shown for illustrative purposes only and are subject to detailed engineering design.

The concepts presented in this plan remain the copyright of Urbanco.
No copies in whole or in part may be made without the permission of Urbanco.

0 5 10 15 20 25 METRES

CLIENT : Le Boursicot
SCALE : A2 @ 1:500
DATE : 04/05/2022
PLAN No : 056.EP.013
REVISION : 03

urbanco
Suite 3.03 55 Miller Street PYRMONT NSW 2009
PO Box 546 PYRMONT NSW 2009 | 02 9051 9333
hello@urbanco.com.au | www.urbanco.com.au

10. Appendix C – SIDRA Outputs

MOVEMENT SUMMARY

Site: 1PM_DY [OLD_RUS_33_PM_DY+1-4 Bathurst (Site Folder: PM_DV)]

New Site
Site Category: Proposed Design 1
Signals - EQUISAT (Fixed-Time/SCATS) Isolated Cycle Time = 133 seconds (Site Optimum Cycle Time - Minimum Delay)

Vehicle Movement Performance

Mov ID	Turn	INPUT VOLUMES [Total veh/h	HV] veh/h	DEMAND FLOWS [Total veh/h	HV] %	Deg. Satn v/c	Aver. Delay sec	Level of Service	95% BACK OF QUEUE [Veh. veh	Dist] m	Prop. Que	Effective Stop Rate	Aver. No. Cycles	Aver. Speed km/h
South: Russell Street (S)														
1	L2	257	19	271	7.4	0.594	39.8	LOS C	12.6	93.5	0.93	0.82	0.93	38.8
2	T1	146	5	154	3.4	0.624	60.6	LOS E	9.7	69.8	1.00	0.81	1.00	37.3
3	R2	205	18	216	8.8	* 0.956	93.9	LOS F	17.6	132.5	1.00	1.08	1.52	30.3
Approach		608	42	640	6.9	0.956	63.1	LOS E	17.6	132.5	0.97	0.90	1.14	35.1
East: Old Bathurst Road (E)														
4	L2	417	10	439	2.4	0.357	14.6	LOS B	12.1	86.5	0.47	0.70	0.47	45.2
5	T1	805	6	847	0.7	* 0.959	61.8	LOS E	65.3	459.9	0.96	1.09	1.23	30.3
6	R2	104	3	109	2.9	0.466	63.9	LOS E	6.7	48.4	0.97	0.79	0.97	34.3
Approach		1326	19	1396	1.4	0.959	47.2	LOS D	65.3	459.9	0.81	0.94	0.97	35.3
North: Russell Street (N)														
7	L2	46	0	48	0.0	* 0.964	99.2	LOS F	11.2	81.1	1.00	1.14	1.63	29.8
8	T1	77	1	81	1.3	0.964	93.7	LOS F	11.2	81.1	1.00	1.14	1.63	32.5
9	R2	7	4	7	57.1	0.964	98.7	LOS F	11.2	81.1	1.00	1.14	1.63	28.3
Approach		130	5	137	3.8	0.964	95.9	LOS F	11.2	81.1	1.00	1.14	1.63	31.4
West: Old Bathurst Road (W)														
10	L2	2	0	2	0.0	0.090	25.6	LOS B	2.8	20.2	0.56	0.46	0.56	42.7
11	T1	301	6	317	2.0	0.241	20.7	LOS B	8.5	60.2	0.60	0.50	0.60	41.1
12	R2	214	8	225	3.7	0.964	96.2	LOS F	18.6	134.6	1.00	1.10	1.54	28.8
Approach		517	14	544	2.7	0.964	52.0	LOS D	18.6	134.6	0.76	0.75	0.98	34.0
All Vehicles		2581	80	2717	3.1	0.964	54.3	LOS D	65.3	459.9	0.85	0.91	1.05	34.7

Site Level of Service (LOS) Method: Delay (RTA NSW). Site LOS Method is specified in the Parameter Settings dialog (Site tab).
Vehicle movement LOS values are based on average delay per movement.
Intersection and Approach LOS values are based on average delay for all vehicle movements.
Delay Model: SIDRA Standard (Geometric Delay is included).
Queue Model: SIDRA Standard.
Gap-Acceptance Capacity: SIDRA Standard (Akçelik M3D).
HV (%) values are calculated for All Movement Classes of All Heavy Vehicle Model Designation.

* Critical Movement (Signal Timing)

INTERSECTION SUMMARY

Site: 1AM_DY [OLD_RUS_33_AM_DY+1-4 Bathurst (Site Folder: AM_DV)]

New Site
Site Category: Proposed Design 1
Signals - EQUISAT (Fixed-Time/SCATS) Isolated Cycle Time = 108 seconds (Site Optimum Cycle Time - Minimum Delay)

Intersection Performance - Hourly Values				
Performance Measure	**Vehicles**		**Persons**	
Travel Speed (Average)	35.0	km/h	35.0	km/h
Travel Distance (Total)	4421.9	veh-km/h	5306.3	pers-km/h
Travel Time (Total)	126.3	veh-h/h	151.6	pers-h/h
Desired Speed (Program)	50.0	km/h		
Speed Efficiency	0.70			
Travel Time Index	6.67			
Congestion Coefficient	1.43			
Demand Flows (Total)	2556	veh/h	3067	pers/h
Percent Heavy Vehicles (Demand)	4.5	%		
Degree of Saturation	0.963			
Practical Spare Capacity	-6.5	%		
Effective Intersection Capacity	2655	veh/h		
Control Delay (Total)	38.21	veh-h/h	45.85	pers-h/h
Control Delay (Average)	53.8	sec	53.8	sec
Control Delay (Worst Lane)	82.6	sec		
Control Delay (Worst Movement)	87.9	sec	87.9	sec
Geometric Delay (Average)	2.4	sec		
Stop-Line Delay (Average)	51.4	sec		
Idling Time (Average)	45.3	sec		
Intersection Level of Service (LOS)	LOS D			
95% Back of Queue - Vehicles (Worst Lane)	30.7	veh		
95% Back of Queue - Distance (Worst Lane)	217.6	m		
Ave. Queue Storage Ratio (Worst Lane)	0.24			
Total Effective Stops	2471	veh/h	2966	pers/h
Effective Stop Rate	0.97		0.97	
Proportion Queued	0.92		0.92	
Performance Index	316.1		316.1	
Cost (Total)	5112.72	$/h	5112.72	$/h
Fuel Consumption (Total)	413.3	L/h		
Carbon Dioxide (Total)	983.7	kg/h		
Hydrocarbons (Total)	0.077	kg/h		
Carbon Monoxide (Total)	0.804	kg/h		
NOx (Total)	1.669	kg/h		

Site Level of Service (LOS) Method: Delay (RTA NSW). Site LOS Method is specified in the Parameter Settings dialog (Site tab).
Intersection LOS value for Vehicles is based on average delay for all vehicle movements.
Delay Model: SIDRA Standard (Geometric Delay is included).
Queue Model: SIDRA Standard.
Site Model Variability Index (Iterations 3 to N): 1.6 %
Number of Iterations: 4 (Maximum: 10)
Largest change in Lane Degrees of Saturation for the last three Main (Timing-Capacity) Iterations: 3.4% 3.1% 0.0%

Intersection Performance - Annual Values				
Performance Measure	**Vehicles**		**Persons**	
Demand Flows (Total)	1,226,779	veh/y	1,472,135	pers/y
Delay	18,339	veh-h/y	22,006	pers-h/y
Effective Stops	1,186,219	veh/y	1,423,462	pers/y
Travel Distance	2,122,528	veh-km/y	2,547,034	pers-km/y
Travel Time	60,622	veh-h/y	72,746	pers-h/y
Cost	2,454,103	$/y	2,454,103	$/y
Fuel Consumption	198,364	L/y		
Carbon Dioxide	472,167	kg/y		
Hydrocarbons	37	kg/y		
Carbon Monoxide	386	kg/y		

MOVEMENT SUMMARY

Site: 1AM_DY [OLD_RUS_33_AM_DY+1-4 Bathurst (Site Folder: AM_DV)]

New Site
Site Category: Proposed Design 1
Signals - EQUISAT (Fixed-Time/SCATS) Isolated Cycle Time = 108 seconds (Site Optimum Cycle Time - Minimum Delay)

Vehicle Movement Performance

Mov ID	Turn	INPUT VOLUMES [Total veh/h	HV] veh/h	DEMAND FLOWS [Total veh/h	HV] %	Deg. Satn v/c	Aver. Delay sec	Level of Service	95% BACK OF QUEUE [Veh. veh	Dist] m	Prop. Que	Effective Stop Rate	Aver. No. Cycles	Aver. Speed km/h
South: Russell Street (S)														
1	L2	160	10	168	6.3	0.203	15.0	LOS B	3.2	23.4	0.63	0.71	0.63	44.8
2	T1	68	1	72	1.5	0.352	31.4	LOS C	8.2	59.3	0.82	0.75	0.82	41.9
3	R2	546	31	575	5.7	* 0.943	62.8	LOS E	29.6	217.6	0.95	1.00	1.29	35.1
Approach		774	42	815	5.4	0.943	50.1	LOS D	29.6	217.6	0.87	0.92	1.11	37.2
East: Old Bathurst Road (E)														
4	L2	170	30	179	17.6	0.306	30.1	LOS C	7.3	58.4	0.75	0.75	0.75	41.3
5	T1	315	18	332	5.7	0.822	47.9	LOS D	17.2	126.1	0.99	0.97	1.15	33.2
6	R2	61	2	64	3.3	0.630	63.2	LOS E	3.6	26.0	1.00	0.80	1.11	34.4
Approach		546	50	575	9.2	0.822	44.1	LOS D	17.2	126.1	0.91	0.88	1.02	36.1
North: Russell Street (N)														
7	L2	78	2	82	2.6	* 0.963	87.9	LOS F	14.2	103.2	1.00	1.21	1.65	31.7
8	T1	107	6	113	5.6	0.963	78.6	LOS F	14.2	103.2	1.00	1.21	1.65	34.4
9	R2	10	0	11	0.0	0.963	83.2	LOS F	14.2	103.2	1.00	1.21	1.65	30.5
Approach		195	8	205	4.1	0.963	82.6	LOS F	14.2	103.2	1.00	1.21	1.65	33.2
West: Old Bathurst Road (W)														
10	L2	4	0	4	0.0	0.346	43.0	LOS D	8.6	60.6	0.81	0.70	0.81	38.2
11	T1	663	5	698	0.8	* 0.930	53.7	LOS D	30.7	216.5	0.93	1.01	1.18	32.2
12	R2	246	4	259	1.6	0.887	64.5	LOS E	15.6	111.0	1.00	1.01	1.34	33.5
Approach		913	9	961	1.0	0.930	56.6	LOS E	30.7	216.5	0.95	1.01	1.22	32.7
All Vehicles		2428	109	2556	4.5	0.963	53.8	LOS D	30.7	217.6	0.92	0.97	1.18	35.0

Site Level of Service (LOS) Method: Delay (RTA NSW). Site LOS Method is specified in the Parameter Settings dialog (Site tab).
Vehicle movement LOS values are based on average delay per movement.
Intersection and Approach LOS values are based on average delay for all vehicle movements.
Delay Model: SIDRA Standard (Geometric Delay is included).
Queue Model: SIDRA Standard.
Gap-Acceptance Capacity: SIDRA Standard (Akçelik M3D).
HV (%) values are calculated for All Movement Classes of All Heavy Vehicle Model Designation.

* Critical Movement (Signal Timing)

INTERSECTION SUMMARY

Site: 1PM_DY [OLD_RUS_33_PM_DY+1-4 Bathurst (Site Folder: PM_DV)]

New Site
Site Category: Proposed Design 1
Signals - EQUISAT (Fixed-Time/SCATS) Isolated Cycle Time = 133 seconds (Site Optimum Cycle Time - Minimum Delay)

Intersection Performance - Hourly Values				
Performance Measure	**Vehicles**		**Persons**	
Travel Speed (Average)	34.7	km/h	34.7	km/h
Travel Distance (Total)	4661.7	veh-km/h	5594.0	pers-km/h
Travel Time (Total)	134.2	veh-h/h	161.1	pers-h/h
Desired Speed (Program)	50.0	km/h		
Speed Efficiency	0.69			
Travel Time Index	6.61			
Congestion Coefficient	1.44			
Demand Flows (Total)	2717	veh/h	3260	pers/h
Percent Heavy Vehicles (Demand)	3.1	%		
Degree of Saturation	0.964			
Practical Spare Capacity	-6.7	%		
Effective Intersection Capacity	2818	veh/h		
Control Delay (Total)	41.00	veh-h/h	49.20	pers-h/h
Control Delay (Average)	54.3	sec	54.3	sec
Control Delay (Worst Lane)	96.2	sec		
Control Delay (Worst Movement)	99.2	sec	99.2	sec
Geometric Delay (Average)	2.2	sec		
Stop-Line Delay (Average)	52.1	sec		
Idling Time (Average)	46.7	sec		
Intersection Level of Service (LOS)	LOS D			
95% Back of Queue - Vehicles (Worst Lane)	65.3	veh		
95% Back of Queue - Distance (Worst Lane)	459.9	m		
Ave. Queue Storage Ratio (Worst Lane)	0.38			
Total Effective Stops	2460	veh/h	2952	pers/h
Effective Stop Rate	0.91		0.91	
Proportion Queued	0.85		0.85	
Performance Index	367.3		367.3	
Cost (Total)	5374.80	$/h	5374.80	$/h
Fuel Consumption (Total)	413.0	L/h		
Carbon Dioxide (Total)	979.4	kg/h		
Hydrocarbons (Total)	0.076	kg/h		
Carbon Monoxide (Total)	0.791	kg/h		
NOx (Total)	1.281	kg/h		

Site Level of Service (LOS) Method: Delay (RTA NSW). Site LOS Method is specified in the Parameter Settings dialog (Site tab).
Intersection LOS value for Vehicles is based on average delay for all vehicle movements.
Delay Model: SIDRA Standard (Geometric Delay is included).
Queue Model: SIDRA Standard.
Site Model Variability Index (Iterations 3 to N): 0.0 %
Number of Iterations: 2 (Maximum: 10)
Largest change in Lane Degrees of Saturation for the last three Main (Timing-Capacity) Iterations: 10.4% 52.6% 0.0%

Intersection Performance - Annual Values				
Performance Measure	**Vehicles**		**Persons**	
Demand Flows (Total)	1,304,084	veh/y	1,564,901	pers/y
Delay	19,679	veh-h/y	23,615	pers-h/y
Effective Stops	1,180,883	veh/y	1,417,059	pers/y
Travel Distance	2,237,620	veh-km/y	2,685,144	pers-km/y
Travel Time	64,428	veh-h/y	77,313	pers-h/y
Cost	2,579,902	$/y	2,579,902	$/y
Fuel Consumption	198,245	L/y		
Carbon Dioxide	470,105	kg/y		
Hydrocarbons	37	kg/y		
Carbon Monoxide	380	kg/y		